TRIDELTA
MEIDENSHA

Surge Arrester for Railway Application

Discover it

APP-RAIL_2022/02

TRIDELTA MEIDENSHA

About us

The production of surge arresters in 1960 was not the beginning of our success story. The foundations for our current success were laid as early as 1889.

We have always been interested in producing high quality protection devices for the supply of electricity. We started with the production of insulators and then eventually turned our focus to the development and production of surge arresters.

In 1989, we switched production from valve arresters to metal oxide surge arresters. In 2015, after years of independence, we decided to grow further with a great partner by our side, and so we took the step to join the MEIDEN Group.

Since this merger, we have successfully combined our expertise in surge arrester manufacturing with Meidensha's expertise in varistor block manufacturing.

MEIDEN

Surge arresters are used to protect other electrical equipment from dangerous surges. These can be caused by switching operations or atmospheric overvoltages and cannot be prevented. By using Tridelta Meidensha surge arresters, you can protect your electrical equipment from these events in the best possible way and avert expensive damage.

Our in-house R&D team works closely with our sales engineers, quality department and production to develop the best technologies for your requirements at any time.

When you choose Tridelta Meidensha surge arresters, you not only get protection devices for your electrical equipment, but also:

Best Quality - Made in Germany

We guarantee easy installation and freedom from maintenance over the entire life cycle

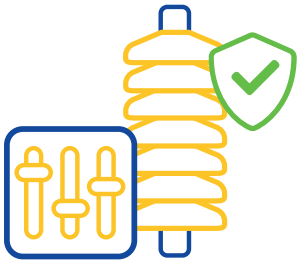

Surge Arresters that are standardized but can be customized

Support from our Surge Arrester experts

Reliable products and service

Reduction of expensive outages

Meidensha Corporation, headquartered in Tokyo Japan, is an electrical equipment manufacturer with an extensive product portfolio, ranging from power generation, transmission and distribution and control systems for electric utilities and railways, to motors and controls for various industrial applications. The company was founded in 1897 and now operates manufacturing facilities in Japan, China, Singapore, Thailand, India, Malaysia, Germany, and USA.

Meidensha is a public stock company with a yearly turnover of around 2 Billion Euro.

If you are interested in more information about our parent company, you can find it at www.meidensha.com.

MEIDEN
Quality connecting the next

Surge Arrester Business

Meidensha's innovative spirits have produced many new technologies, including the development of the world´s first metal oxide surge arresters (MOSA) for electric power systems in 1975. This has set new industrial standards for the protection of power equipment and was awarded an IEEE Milestone in 2014.

R&D hub of metal oxide blocks

Metal oxide blocks are the core of surge arrester technology. Meidensha embarked on the development of blocks for surge arresters in 1972 as a pioneer. Backed up with experiences, Meidensha manufactures high-quality, high-performance blocks in different sizes for light duty to heavy duty applications, AC to DC applications and different installation environments.

T&D Business

Meidensha also manufactures T&D equipment such as transformers, vacuum circuit breakers, vacuum interrupters, high voltage switchgears, mobile substations, etc. including the use of energy management system (EMS) technologies.

One step ahead

The heart of our arresters is the metal oxide block, also called active part.Only through their strong non-linear voltage-current characteristic with the possibility to transfer a huge mount of electical charge in a short of time, it is possible that surge arresters can reduce overvoltages and absorp excess energy in order to ensure the protection of electrical equipment.

Our metal oxide blocks consist of zinc oxide which is compressed into blocks. Zinc oxide varistors do have the advantage of a very low response time of less than a nanosecond. Sensitive equipments are thus protected against voltage peaks almost without any delay.

The connection between Meidensha and Tridelta allowed us to bring in expert knowledge related to the production of zinc oxide blocks.

Zinc oxide blocks from Meidensha meet the highest quality standards. Due to the entrepreneurial connection of our two companies, there are no limits to the development of surge arresters of the highest quality.

Always with an ear to the market, our research and development department develops customized solutions for almost any application.

Zinc oxide blocks give our surge arresters most of their technical properties. Various parameters do have an impact on the possible applications of our surge arresters. The energy absorption capacity, residual voltages, power losses, continuous voltage, flashover behavior are just some of the technical properties that are largely determined by the varistor blocks.

We would be pleased to provide you with more detailed information on request.

Railway Protection by

TRIDELTA MEIDENSHA

Globalization is driven by mobility. To accommodate this progress, surge protection is important not only for substations and transmission lines, but also for catenary systems and traction units. The demand for reliable protection in railroad applications is a challenge that our modern surge arresters can solve. We contribute to this by offering excellent, reliable and adapted solutions for surge protection in railroad applications.

In our product range we offer polymer and porcelain housings, depending on customer requirements and specific application.

Polymer housings are perfect for a heavily polluted environment due to their optimized hydrophobic properties. They also offer a combination of light weight and high stability.

Our well-known porcelain series is designed for high mechanical loads and seismic activities.

Standardized but customized is one of our self defined brand cores. Standardisation in our production process allows us to offer high-quality, cost-effective surge arresters. The customisation on top gives us the possibility to react on nearly every customer need.

Our international sales team is aware of regional needs regarding seismic stability or special polluted areas. Surge arresters by Tridelta Meidensha are always the right choice to keep your electrical equipment protected.

TRIDELTA MEIDENSHA



Our surge arresters - tested for railway application

				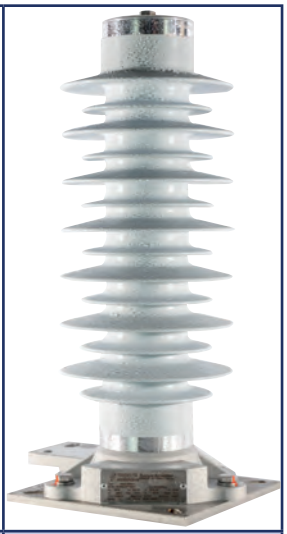
Housing	HTV silicone SBKW XX/DC-B	Porcelain SB-B XX/DC-B	HTV Silicone SBKW XX/DC-C	LSR Silicone SBKC XX SM/SH
continuous operating voltage	1 kV up to 4,5 kV	1 kV up to 4,5 kV	1 kV up to 4,5 kV	3 kV up to 396 kV
Classification IEC 62484	DC-B	DC-B	DC-C	n.a.
Rated short circuit	40 kA	40 kA	40 kA	65 kA
Nominal discharge current	10 kA	10 kA	20 kA	10 kA for SM 20 kA for SH
Rated thermal energy	12 kJ/kV	12 kJ/kV	28 kJ/kV	8 kJ/kV for SM 10 kJ/kV for SH
High current impulse	100 kA	100 kA	200 kA	100 kA
Charge transfer rating	2,5 As	2,5 As	7,5 As	2,4 As
Type test according to	IEC 62848	IEC 62848	IEC 62848	IEC 60099-4

Table 1: Portfolio overview



Dependent on the railway application it is necessary to differentiate between AC and DC rail networks. For the AC networks the frequencies range from 16 2/3 Hz up to 60 Hz and typical system voltage system voltages are 12,5 kV, 15 kV and 25 kV.

The most common DC networks have a nominal system voltage of 750 V, 1500 V and 3000 V. They are defined in the International standard IEC 60850 or the European standard EN 50163. A more detailed overview can be seen in the table below.

Application	Nominal Voltages	Power Supply	Typical continuous operating voltage
Mine railway (underground)	220 V 500 V	DC	1 kV
Mine railway (overground)	1.200 V 1.500 V 2.400 V 3.000 V	DC	1,5 kV 2 kV 3 kV 4 kV
Trams, trolley bus	600 V 750 V	DC	1 kV
Underground / suburban railway	750 V 1.200 V 1.500 V 3.000 V	DC	1,5 kV 2 kV 3 kV 4 kV
Commuter railway	750 V to 3.000 V	DC	1 kV to 4 kV
Long-distance railway	1.500 V 3.000 V	DC	2 kV 4 kV
Rolling stock, high speed trains	12.500 V 15.000 V 25.000 V	AC	15 kV 18 kV 29 kV

Table 2: Standard applications for rolling stock

TRIDELTA MEIDENSHA

Selecting surge arresters

When selecting arresters for railroad applications, electrical -, mechanical requirements and environmental conditions must be taken into account. For the electrical selection of railroad arresters, the system voltage of the operating network (Us) in normal operation must be taken into account.

In case of a fault, high overvoltages can occur and their duration depends on the network parameters, which must be taken into account when selecting the arrester. In addition, arresters must absorb electrical energy in the form of heat in the event of an overvoltage, and the maximum energy to be expected must also be specified.

Railroad arresters are exposed to various mechanical stresses, depending on the application. Dynamic and static forces such as those that can arise during operation at high speeds play a role. When dimensioning the housing of arresters, possible air pollution and the stress on the pollution layer caused by salt, but also by dust, must be taken into account.

Our surge arrester series for DC applications was revised in 2021 and an important part of our manufacturing process was optimized.

The resulting new arrester type series has been tested according to

- **IEC 62848-1**,
- **IEC 61373** and
- **EN 45545-2** standards

The basis of success
Type tests on surge arresters

Surge arresters for railroad applications are exposed to special influences and therefore require various additional tests to ensure safe use in railroad operations. In addition to the type tests to confirm the electrical capabilities of the arresters, we have performed additional and necessary tests by independent laboratories.

We would like to give you a short insight into the type tests which have been carried out for our surge arresters. In order to be able to classify the safety of arresters, 3 hazard levels (HL1, HL2, HL3) are defined in EN 45545-2.

These are determined by concrete parameters which you can find in the table below. The parameters in HL3 are the strictest and correspond to the highest quality. Of course, our arresters have passed all tests with the parameters for HL3.

These include a number of tests to determine the burning behavior and the harmlessness of the materials used in the event of fire.

Set of requirements	Reference to test methods	Parameter and unit	Maximum or Minimum	HL1	HL2	HL3
R22	EN ISO 4589-2, OI	oxygen content [OI] %	Minimum	28	28	32
	EN ISO 5659-2, 25 hWm^{-2}	D_s max. dimensionless	Maximum	600	300	150
	NF X 70-100-1, 600 °C and NF X 70-100-2, 600 °C	CIT_{NLP} dimensionless	Maximum	1,2	0,9	0,75
R23	EN ISO 4589-2, OI	oxygen content [OI] %	Minimum	28	28	32
	EN ISO 5659-2, 25 hWm^{-2}	D_s max. dimensionless	Maximum	-	600	300
	NF X 70-100-1, 600 °C and NF X 70-100-2, 600 °C	CIT_{NLP} dimensionless	Maximum	-	1,8	1,5

Table 3: Classification of hazard levels according to DIN EN 45545-2

DIN EN 45545-2

The fire test according to DIN EN 45545-2 is a specific test for fire protection in rail vehicles and specifically the testing of the requirements for the fire behavior of materials and components. After extensive testing, our surge arresters were certified to be safe in the event of fire for all design classes from standard vehicles to sleeping and couchette cars.

DIN EN ISO 4589-2

The test according to DIN EN ISO 4589-2 serves to determine the burning behavior by the oxygen index at ambient temperatures.

For this purpose, a test specimen in a glass cylinder through which a specific oxygen/nitrogen mixture flows is ignited by means of a propane gas flame. The burning behavior of the test specimen is observed and the burning time and the distance burned are measured.

In this method, the minimum oxygen concentration in mixtures with nitrogen is determined at which the combustion of the test specimen is just maintained. The result of this is defined as the oxygen index [OI]. The classification of the hazard classes and the corresponding limit values for the oxygen index can be found in table 3.

The material of our surge arresters passed the test with a value of 51.2 %.

DIN EN ISO 5659-2

The determination of the optical smoke density by single-chamber testing is specified in the DIN EN ISO 5659-2 standard.
In a test chamber, square-shaped test specimens are irradiated by means of a pilot flame. The resulting smoke gases are collected in the test chamber and the smoke density is measured continuously.
For the evaluation of the smoke toxicity, samples are taken and analyzed by means of FTIR spectrometers.

The purpose of the test is to determine whether the materials tested do not generate exceptionally large amounts of smoke or release toxic substances to a significant extent in the event of a fire.
Our materials also passed this test and the smoke intensity remained below the maximum values for the HL3 for all 3 samples.

IEC 61373

In the field of railroad applications, vibrations and a high mechanical load capacity also always play a major role in terms of the requirements placed on our surge arresters.

A corresponding suitability test is recorded in the IEC 61373 standard as a shock and vibration test.

An acceleration of 4,25 m/s^2 was assumed for the simulated test. In addition, the test was carried out in 3 axis over 5 hours each. In the operating test, the arrester is also tested in 3 axis, but with an acceleration of 0,75 m/s^2 and 10 minutes per axis.

The shock test is performed with a peak acceleration of 50 m/s^2 and a duration of 30 ms. After 3 shocks per axis, no defects were detected on the test arresters in the visual inspection.

Surge arresters for direct current

Surge arresters can be classified according to different aspects. In this brochure, we focus on the subdivision into DC and AC arresters. Both are conditionally suitable for use in the railway segment.

On the following pages, we would like to introduce our products for use in the DC sector. The DC voltage is usually characterized by a constant voltage amplitude over the time.

In railroad applications, high overvoltages can be generated by lightning strikes as well as switching overvoltages. These overvoltages must be safely and repeatedly limited to an acceptable voltage level to protect the power supply equipment and the „trains“ against failure. Our DC arresters can be used for example for mine railway, commuter railway or long-distance railroads.

The Tridelta Meidensha portfolio currently includes both polymer and porcelain arresters. In table 4 we would like to give you a short overview about the advantages for the decision between Porcelain and Polymer surge arresters for direct current. With our new d.c. voltage surge arresters we prove our awareness of several requests from the market regarding test standards and the flexibility to the specific customer needs.

Our polymer d.c. surge arresters are state of the art with their filament technology. This semi-automated process increases product quality and the new light structure allows us to combine a low weight with high mechanical strength. With this technologoy a filament cage is built around the metal oxide blocks.

The great advantage of this production method is a flexible adjustment of length and width. The Injection Molding Process works with HTV Silicone Rubber which is highly hydrophobic. This technology provides perfect bonding performance to prevent moisture ingress and increases reliability.

With the modular design, we enable maximum flexibility to cover almost any area of application in a DC voltage system.

Porcelain - SB-B Series	Polymer - SBKW-B Series
	
✓ Market proven design	✓ lightweight
✓ highest mechanical strength	✓ more cost effective
✓ environmental resistance	✓ no internal gas volume

Table 4: Advantages of porcelain and silicone arresters

TRIDELTA MEIDENSHA

SBKW-B XX/DC-B

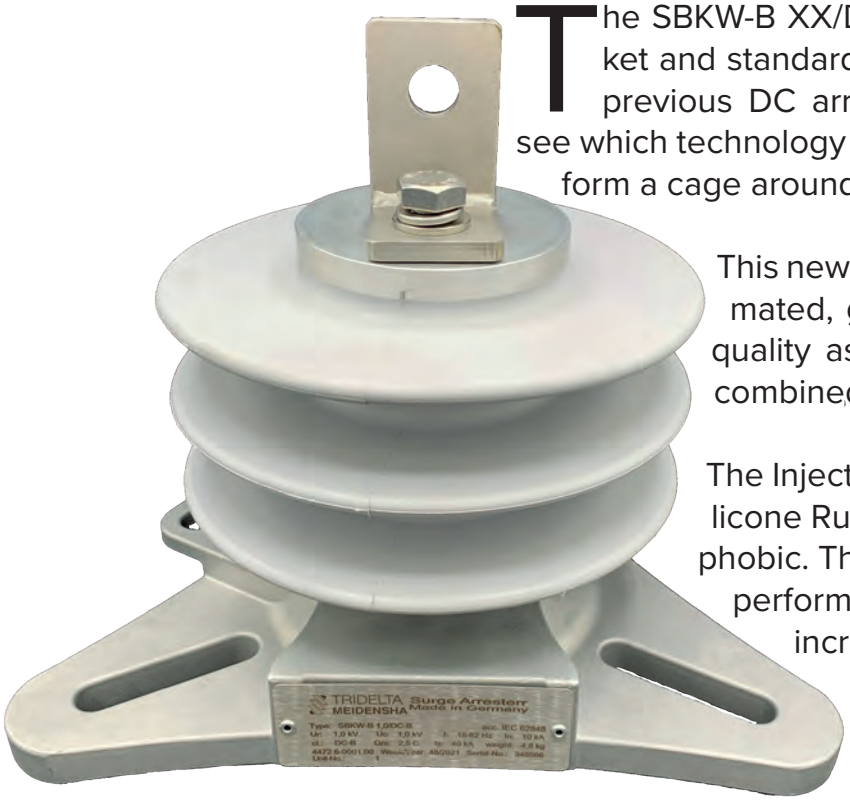

The SBKW-B XX/DC-B was developed according to market and standard requirements and stands out from our previous DC arresters. Externally, it is not possible to see which technology is inside. Thousands of filament threads form a cage around the active part.

This new production process, which is semi-automated, guarantees a consistently high product quality as well as a new light internal structure combined with maximum mechanical stability.

The Injection Molding Process works with HTV Silicone Rubber in RAL 7040 which is highly hydrophobic. This technology provides perfect bonding performance to prevent moisture ingress and increases reliability.

All fastening material is made of aluminum alloy. All clamps and screws are made of stainless steel.

As optional accessories you can choose from different connection variants, or provide the arrester with an insulation base to enable the interconnection of monitoring devices.

SBKW-B XX/DC-B is type tested according to IEC 62848-1, IEC 61373 and EN 45545-2 as Distribution Class „B“. It is available from 1 kV to 4,5 kV.

In order to optimally adapt our surge arrester to your needs, not only the correct selection of electrical parameters is important, but also the selection of connection and installation options. In the following you will get a short overview which variants are standard for this arrester type SBKW-B XX/DC-B. All important residual voltage parameters for each available continous operating voltage can be found in table 5.

Technical parameters

Nominal discharge current:	10 kA
Pressure relief capacity (0,2 s):	40 kA
High current impulse (4/10 µs):	100 kA
Specific energy withstand acc. to IEC 60099-4:	12 kJ/kV_{Ur}
Charge transfer capability:	2,5 As

Housing specifications

Specified short-term load (SSL):	1.100 Nm
Specified long-term load (SLL):	450 Nm
Approx. height:	115 mm
Creepage distance:	320 mm

Type	Rated d.c. voltage	Continu-ous d.c. operating voltage	Residual voltage at steep, lightning and switching impulse current							Insulation of arrester housing (applied to 1.000 m a.s.l.N.)	
	U_r	U_c	10 kA (1/20 µs)	5 kA (8/20 µs)	10 kA (8/20 µs)	20 kA (8/20 µs)	250 A (30/70 µs)	500 A (30/70µs)	1000 A (30/70µs)	D.c. withstand voltage (wet)	Lightning impulse with-stand
	kV	kV	kV	kV	kV	kV	kV	kV	kV	DCWV 1 min wet kVdc	LIWV 1.2/50µs kV
SBKW-B 1/DC-B	1,0	1,0	2,7	2,5	2,6	2,8	2,0	2,1	2,1	35	123
SBKW-B 1,5/DC-B	1,5	1,5	3,7	3,5	3,7	3,9	2,8	2,9	3,0		
SBKW-B 2/DC-B	2,0	2,0	5,1	4,8	5,0	5,4	3,9	4,0	4,1		
SBKW-B 3/DC-B	3,0	3,0	7,5	6,9	7,3	7,9	5,7	5,8	6,0		
SBKW-B 4/DC-B	4,0	4,0	10,2	9,5	10,0	10,8	7,8	8,0	8,2		
SBKW-B 4,5/DC-B	4,5	4,5	11,5	10,7	11,3	12,2	8,8	9,0	9,2		

Table 5: Electrical parameters SBKW-B XX/DC-B

Line Terminals [1)]

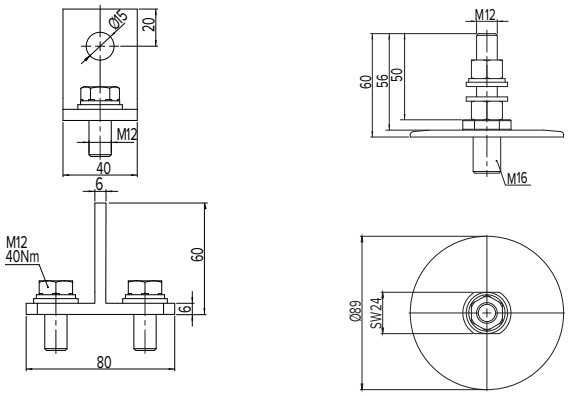

cable eye connection

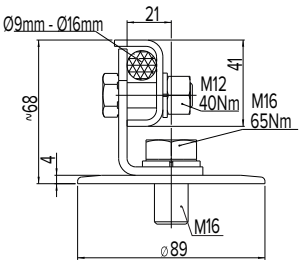

clamping of conductor cable 9 - 16 mm diameter

Variants of Installation [1)]

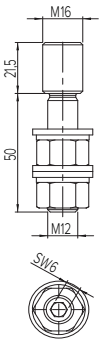

single screw to fix the Surge Arrester on your own platform

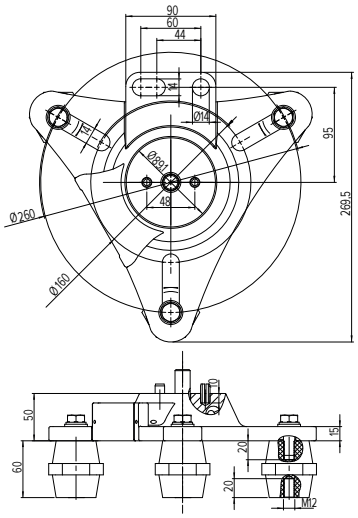

Isolated 3-Pod pedestal, for a root diameter between 160 and 260 mm.
Available as unisolated variant.

1) Further phase connections and installation variants can be requested from us or created in cooperation individually and customer-oriented.
Weitere Phasenanschlüsse und Aufstellvarianten können bei uns erfragt oder in Zusammenarbeit individuell und kundenorientiert erstellt werden.

TRIDELTA MEIDENSHA

SB-B XX/DC-B

The porcelain series of our DC arresters has been in use for decades and has always proven its worth. Therefore, it was not necessary to do profound changes in the design or functionality. However, in order to meet the market requirements, some parameters were rechecked under the standard for railroad arresters. We now use a different varistor with even better technical parameters and the type series was renamed accordingly.

As before, this surge arrester operates with an enclosed gas volume. In the event of an overvoltage acting on the active part inside the brown glazed housing, the excess pressure is discharged safely via a pressure relief device to prevent the housing from bursting. With our SB-B XX/DC-B series, you are always on the safe side, especially in areas with high mechanical requirements.

All fastening material is made of aluminum alloy. All clamps and screws are made of stainless steel.

SB-B XX/DC-B is type tested according to IEC 62848-1 and IEC 61373 as Distribution Class B.

It is available from 1 kV to 4,5 kV. All important residual voltage parameters for each available continous operating voltage can be found in table 6.

Technical parameters

Nominal discharge current:	10 kA
Pressure relief capacity (0,2 s):	40 kA
High current impulse (4/10 µs):	100 kA
Specific energy withstand acc. to IEC 60099-4:	12 kJ/kV$_{Ur}$
Charge transfer capability:	2,5 As

Housing specifications

Specified short-term load (SSL):	2.000 Nm
Specified long-term load (SLL):	800 Nm

Type	Rated d.c. voltage	Continu-ous d.c. operating voltage	Residual voltage at steep, lightning and switching impulse current							height	creepage distance	Insulation of arrester housing (applied to 1.000 m a.s.l.N.)	
	U_r	U_c	10 kA (1/20 µs)	5 kA (8/20 µs)	10 kA (8/20 µs)	20 kA (8/20 µs)	250 A (30/70 µs)	500 A (30/70µs)	1000 A (30/70µs)	≈h		D.c. withstand voltage (wet)	Lightning impulse withstand
	kV	kV	kV	kV	kV	kV	kV	kV	kV	mm	mm	DCWV 1 min wet kVdc	LIWV 1.2/50µs kV
SB-B 1/DC-B	1,0	1,0	2,7	2,5	2,6	2,8	2,0	2,1	2,1	260	152	29	109
SB-B 1,5/DC-B	1,5	1,5	3,7	3,5	3,7	3,9	2,8	2,9	3,0				
SB-B 2/DC-B	2,0	2,0	5,1	4,8	5,0	5,4	3,9	4,0	4,1				
SB-B 3/DC-B	3,0	3,0	7,5	6,9	7,3	7,9	5,7	5,8	6,0	284	210	35	128
SB-B 4/DC-B	4,0	4,0	10,2	9,5	10,0	10,8	7,8	8,0	8,2				
SB-B 4,5/DC-B	4,5	4,5	11,5	10,7	11,3	12,2	8,8	9,0	9,2				

Table 6: Electrical parameters SB-B XX/DC-B

240 mm bolt circle diameter

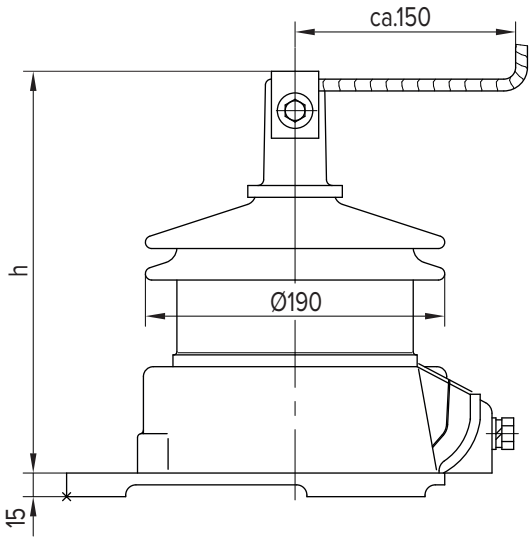

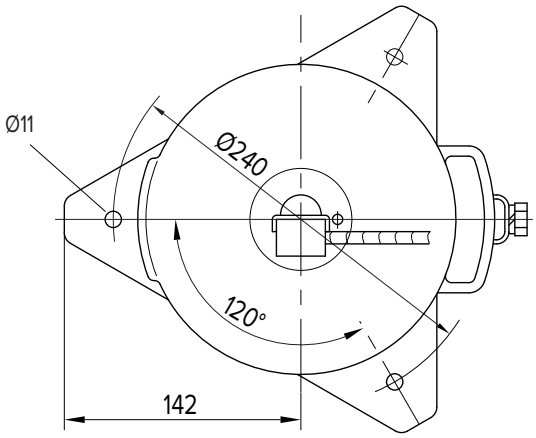

162 mm bolt circle diameter

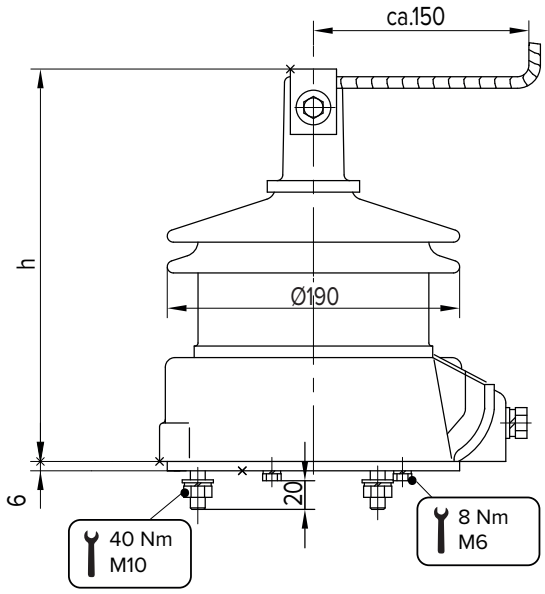

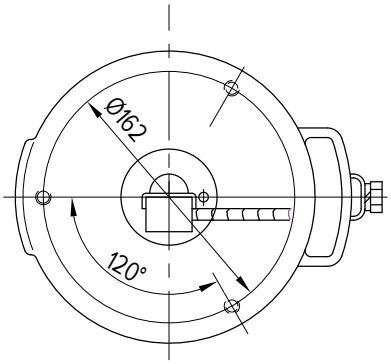

TRIDELTA MEIDENSHA

SBKW-B XX/DC-C

This SBKW-B XX/DC-C railroad arrester with the rated thermal energy of 28 kJ/kV offers protection in the field of railroad applications. It is type tested according to IEC 62848-1 IEC 61373 and EN 45545. Like DC-B class SBKW-B Arrester the active part is surrounded by a cage of with filament strings. The housings consists of HTV Silicone Rubber in RAL 7040.

At the heart of this development are metal oxide blocks from our parent company Meidensha in Japan. Specially manufactured at MEIDEN ZHENGZHOU, these offer a higher energy absorption capacity with a diameter of 120 mm, which is why it was possible to achieve a type series for the Distribution Class Classification of the rating „C“. It is therefore no longer necessary to connect varistors in parallel, which drastically reduces the susceptibility to interference.

All fastening material is made of aluminum alloy. All clamps and screws are made of stainless steel.

As optional accessories you can choose from different connection variants, or provide the arrester with an insulation base to enable the interconnection of monitoring devices .

It is available from 1 kV to 4,5 kV. All important residual voltage parameters for each available continous operating voltage can be found in table 7.

Technical parameters

Nominal discharge current:	20 kA
Pressure relief capacity (0,2 s):	40 kA
High current impulse (4/10 µs):	200 kA
Specific energy withstand acc. to IEC 60099-4:	28 kJ/kV$_{Ur}$
Charge transfer capability:	7,5 As

Housing specifications

Specified short-term load (SSL):	3.000 Nm
Specified long-term load (SLL):	1.500 Nm

Type	Rated d.c. voltage	Continu-ous d.c. operating voltage	Residual voltage at steep, lightning and switching impulse current							Insulation of arrester housing (applied to 1.000 m a.s.l.N.)	
	U_r	U_c	10 kA (1/20 µs)	5 kA (8/20 µs)	10 kA (8/20 µs)	20 kA (8/20 µs)	250 A (30/70 µs)	500 A (30/70µs)	1000 A (30/70µs)	D.c. withstand voltage (wet) DCWV 1 min wet kVdc	Lightning impulse with-stand LIWV 1.2/50µs kV
	kV	kV	kV	kV	kV	kV	kV	kV	kV		
SBKW-B 1/DC-C	1,0	1,0	2,3	2,2	2,3	2,4	1,8	1,9	2,0	40	50
SBKW-B 1,5/DC-C	1,5	1,5	3,5	3,3	3,4	3,7	4,2	2,8	2,9		
SBKW-B 2/DC-C	2,0	2,0	4,6	4,4	4,6	4,9	3,7	3,8	3,9		
SBKW-B 3/DC-C	3,0	3,0	6,9	6,6	6,8	7,3	5,5	5,7	5,9		
SBKW-B 4/DC-C	4,0	4,0	9,2	8,8	9,1	9,8	7,4	7,6	7,8		
SBKW-B 4,5/DC-C	4,5	4,5	10,4	9,9	10,3	11,0	8,3	8,5	8,8		

Table 7: Electrical parameters SBKW-B XX/DC-C

Line Terminals [1)]

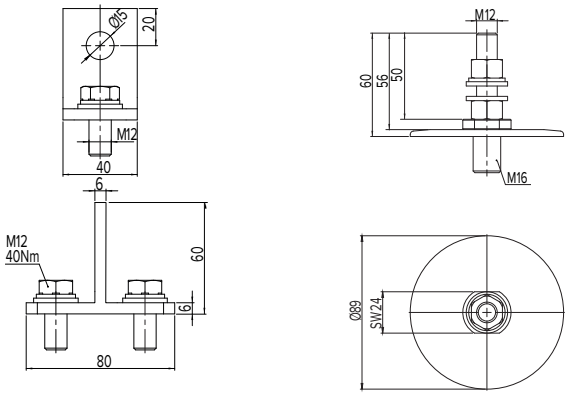

cable eye connection

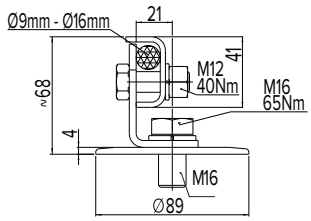

clamping of conductor cable 9 - 16 mm diameter

Variants of Installation [1)]

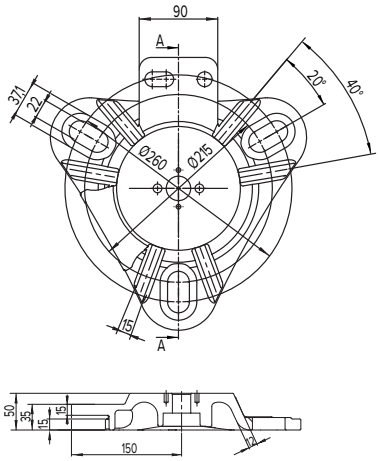

Unisolated 3-pod-pe-destal, for a pitch-circle diameter between 215 mm and 260 mm. Available as insulated variant.

1) Further phase connections and installation variants can be requested from us or created in cooperation individually and customer-oriented.
Weitere Phasenanschlüsse und Aufstellvarianten können bei uns erfragt oder in Zusammenarbeit individuell und kundenorientiert erstellt werden.

TRIDELTA MEIDENSHA

Surge arresters for alternating current

With alternating current, the current is zero in the time average, since the positive and negative values changing in regular repetitions complement each other. Alternating current is represented as a sine wave and in the railway sector they are used on trains as well to limit the voltage in the railroad systems that are necessary for the electrification of the railroad.

For the requirements in the railroad sector, no other regulations apply in the area of AC voltage than otherwise for the testing of surge arresters. Therefore, the arresters are type-tested according to the IEC 60099-4 standard.

For your applications, we recommend surge arresters from our cage design series. Detailed information and a corresponding preselection can be found on the following pages.

As always: If you do not find the right arrester for your application at first sight, please contact our sales engineers who will find solutions together with you on the highest technical level.

SBKC Design - Tridelta‘s Allrounder

The combination of low weight and excellent mechanical stability was one of the reasons for the invention of our SBKC-Series. For this technology the zinc oxide blocks are fixed in a cage of fiberglas rods and directly molded with LSR-Silicone in RAL 7040 colour. This prevents moisture ingress and thus ensures high reliability. We use high quality silicone that is water repellent and UV-aging resistant for life and ensures excellent impurity behavior.

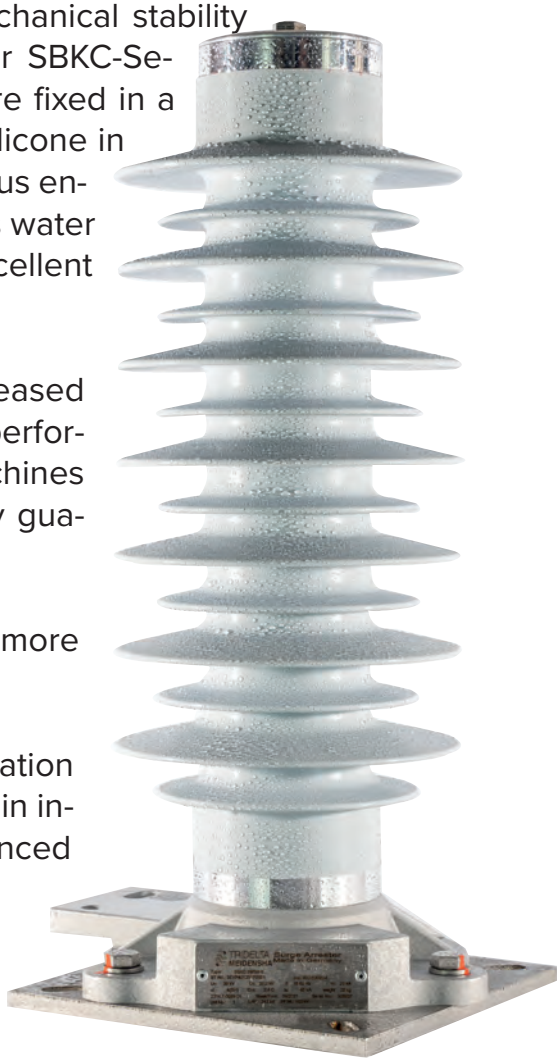

Our surge arresters in cage design are suitable for increased mechanical requirements and offer an excellent price/performance ratio. High processing quality on the latest machines and testing with state-of-the-art measuring technology guarantee a long service life.

Since its launch in 2007, this product line has proven more than enough its outstanding properties.

With the renewal of the IEC guidelines for the classification of arresters, the type tests have been carried out again in independent testing laboratories, because we are convinced of the quality of our surge arresters.

This series is not only suitable for railway application and transformer protection. Due to its low weight it can also be used as a line arrester.

Technical parameters	SH		SM	
Nominal discharge current:	20	kA	10	kA
Switching impulse discharge current:	2	kA	1	kA
Repetitive charge transfer rating Q_{rs}:	2,4	C	2,4	C
Thermal energy rating Wth:	10	kJ/kV $_{Ur}$	8	kJ/kV $_{Ur}$
Line discharge class:	4		3	
High current impulse (4/10 µs):	100	kA	100	kA
Rated short-circuit current:	65	kA	65	kA

Table 8: Technical parameters SBKC class SH and SM

System voltage	Type	Rated voltage	Continuous operating voltage	Temporary overvoltage TOV [1]		Residual voltage at steep-, lightning and switching impulse current									Min. housing size
kV		U_r kV	U_c kV	U_{1s} kV	U_{10s} kV	10 kA (1/20 µs) kV	5 kA (8/20 µs) kV	10 kA (8/20 µs) kV	20 kA (8/20 µs) kV	40 kA (8/20 µs) kV	500 A (30/70µs) kV	1000 A (30/70µs) kV	2000 A (30/70µs) kV	3000 A (30/70µs) kV	
12,5	SBKC 18/SH-II	18	14,4	20,3	18,9	49,7	43,2	46,0	49,7	54,7	37,3	38,6	40,0	38,6	01
	SBKC 21/SH-II	21	16,8	23,7	22,0	54,4	47,4	50,4	54,4	60,0	40,8	42,3	43,8	45,1	01
	SBKC 21/SM-II	21	16,8	24,1	22,7	54,4	47,4	50,4	54,4	60,0	40,8	42,3	43,8	45,1	01
	SBKC 24/SM-II	24	19,2	27,6	25,9	62,2	54,1	57,6	62,2	68,5	46,7	48,4	50,1	51,5	02
15	SBKC 24/SH-II	24	19,2	27,1	25,2	62,2	54,1	57,6	62,2	68,5	46,7	48,4	50,1	51,5	02
	SBKC 27/SH-II	27	21,6	30,5	28,3	70,0	60,9	64,8	70,0	77,1	52,5	54,4	56,4	57,9	02
	SBKC 27/SM-II	27	21,6	31,0	29,2	70,0	60,9	64,8	70,0	77,1	52,5	54,4	56,4	57,9	02
	SBKC 30/SM-II	30	24,0	34,5	32,4	77,8	67,7	72,0	77,8	58,7	58,3	60,5	62,6	64,4	02
25	SBKC 39/SH-II	39	31,2	44,1	40,9	101,1	88,0	93,6	101,1	111,4	75,8	78,6	81,4	83,7	03
	SBKC 42/SH-II	42	33,6	47,5	44,1	116,9	94,8	100,8	108,9	120,0	81,6	84,7	87,7	90,1	04
	SBKC 42/SM-II	42	33,6	48,3	45,4	106,6	92,8	98,7	106,6	117,5	79,9	82,9	85,9	88,2	04
	SBKC 45/SM-II	45	36,0	51,8	48,6	114,2	99,4	105,8	114,2	125,8	85,7	88,8	92,0	94,5	04

Table 9: Electrical parameters SBKC class SH and SM

[1] with prior duty

Power-frequency voltage-versus-time characteristic (initial temperature +60 °C)
a) with prior duty (W_{th}); b) without prior duty
SBKC XX/SH-II / SBKC XX/SM-II

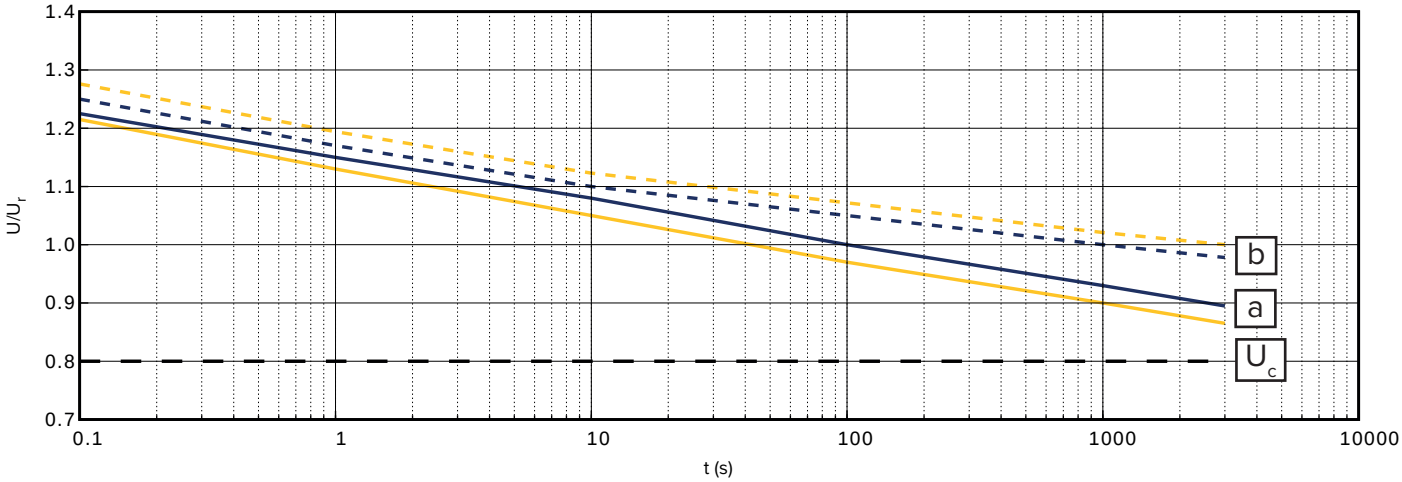

Both SBKC types have the same housing parameters and therefore the same mechanical withstands.

Specified short-term load:	4.000 Nm	Torsional strength:	100 Nm
Specified long-term load:	2.800 Nm	Tensile strength:	10 kN

Housing size	Height	min. creepage distance	max. weight [2]	min. rated voltage	Insulation or arrester housing at standard atmosphere	
					p.f. withstand (wetted)	Lightning impulse withstand voltage
	h				PFWL 50 Hz	LIWL 1.2/50µs
	mm	mm	kg	kV	kV	kV
01	329	820	8	6	128	174
02	385	1015	10	6	149	205
03	441	1210	11	6	169	236
04	497	1405	13	6	189	267

Table 10: Housing parameters SBKC class SH and SM

[2] without accessories.
Please refer to the technical drawing for the specific weight.

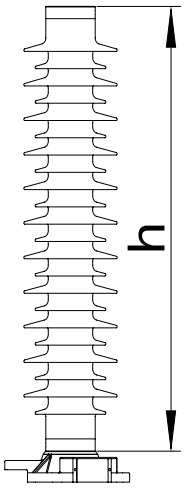

Line Terminals

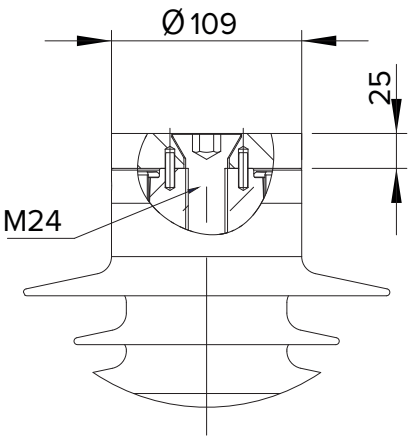

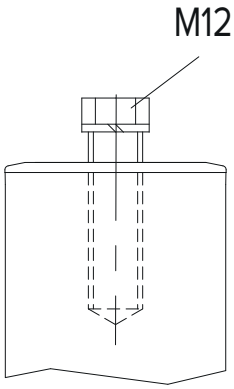

Variants of Installation

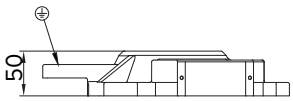

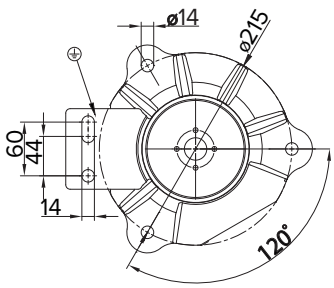

Standard flange with 215 mm diameter.
Available as insulated variant.

TRIDELTA **MEIDENSHA**

Marie-Curie-Str. 3
07629 Hermsdorf

Telephone: +49 (0) 36601 9328 300
Fax: +49 (0) 36601 9328 301

arrester@tridelta-meidensha.de
www.tridelta-meidensha.de